DIGIDIM 503AV / 505 RS232 AV INTERFACE PACKAGE

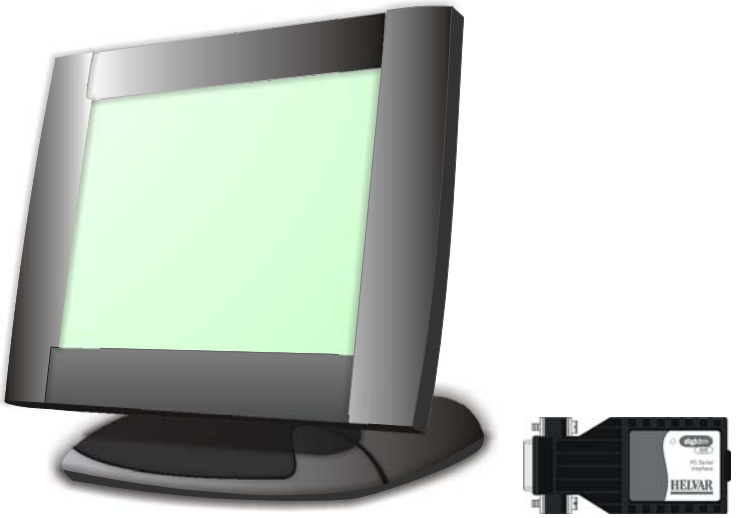

User Guide

Contents

1. Overview 1
1.1. DIGIDIM and DALI 1
1.2. DALI Safety Note 1
1.3. Isolation 1
1.4. Byte Format 1
1.5. References 1
2. Interface Power 2
2.1. 505 Interface Power 2
Old type (black case) 2
New type (transparent case) 2
Both types 2
2.2. 503AV Interface Power 2
3. Connection 3
3.1. Connection Details 4
3.2. 505 Interface RS232 Connector 5
Old Interface (Black Case) 5
New Interface (Transparent Case) 5
4. Operating Modes 6
4.1. 505 Operational Default 6
4.2. 503AV Operational Default 6
5. Installation 6
5.1. 505 Installation 6
5.2. 503AV Installation 6
5.3. System Installation Example 7
6. Programming a DIGIDIM system 8
7. Messages 8
7.1. Message Handling 8
Synchronisation 8
Data Transfer 8
7.2. Message Structure 8
Transmission to Interface 8
Return from Interface 8
DALI System Traffic 9
DALI Component Addressing 9
7.3. Message List 10
8. Appendices 13
8.1. Return message format 13
Reply type 13
Data formats 13
8.2. Touch Screen 14

1. Overview

The DIGIDIM RS232 interface provides the means of interconnection between a Digidim Lighting Control System and an RS232 port. Communication is bi-directional. The interface itself is functionally passive and serves only to link the communications between the computer (or equivalent) and DIGIDIM. The 505 interface uses the industry standard 9-pin D-connector, allowing direct connection to such as a PC compatible serial port. The 503AV interface is a DIN-rail mounted module, more suited to fixed installation applications.

The interface module's power requirements are derived from the connecting systems. Opto-coupling is used for the internal link of the two systems to provide double-insulation between them.

Note: You must install Digidim 'Toolbox' Software to utilise the functions of the AV interface with a Digidim Lighting Control System.

1.1. DIGIDIM and DALI

DIGIDIM is Helvar's implementation of the application of DALI to controls and load interfaces. It is possible that a DIGIDIM system may contain a mixture of devices, including third party DALI-compliant ballasts or dimmers. For this reason, the User Guide often refers to aspects of the DALI standard (IEC 60929 / IEC 62386).

1.2. DALI Safety Note

By definition, when connected to a lamp interface, DALI is recognised as having basic insulation from the mains supply only, and is therefore deemed a live connection. In consequence, the module is constructed to offer a double-insulation rated barrier to the RS232 serial interface and the user, when correctly installed.

Connection to DALI should be by use of mains-rated cable to a double-insulation specification and using a shrouded connector. The low voltage power supply to the DALI components should always be isolated prior to connection to – or work with – the DALI components. Where appropriate, the use of the Helvar DIGIDIM 180 Programming Point panel and proprietary connecting lead offers a means of a double-insulation connection, without powering down the DALI system.

1.3. Isolation

Isolation is 3kV between the RS232 and DALI.

1.4. Byte Format

The byte format is 19,200 baud by default; 8 data bits, no parity and 1 stop bit.

No control or handshaking is used.

1.5. References

- 'RS232 to DALI Command List' (Doc. No. 7860077)
- 'RS232 to 900 Lighting Router Command List' (Doc. No. D004102)
- 'RS232 to 900 Digidim Router User Guide' (Doc. No. D004458)
- 'RS232 to 905 / 910 / 920 Digidim Router User Guide' (Doc. No. D004457)

2. Interface Power

2.1. 505 Interface Power

The Digidim 505 interface takes power from the serial port for operation of the RS232 link. This differs between the old type (black case) and new type (transparent case).

Old type (black case)

Either or both the RTS and DTR lines must be set to HIGH for operation. Internally the lines are diode ‘or’d’.

Note: Some low-power RS232 ports do not provide enough power if only one of these lines is HIGH. Setting both to HIGH always provides enough power.

New type (transparent case)

This requires the RTS line to be set to HIGH, and the DTR line to be set to LOW. Both these lines must be connected for the interface to function. No ground connection is required.

Note: Internally, the DTR line is connected to DCD, but connection to DCD is not required for operation.

Where the control interface does not allow setting of the RTS and DTR lines as required then an external DC supply must be used. The exact specification of the DC supply is not critical but must be of double-insulation rating with a floating output. The voltage must be between +/- 4 and +/- 12 volts and remain stable with no load. The supply negative is connected to pin 4 of the interface, the supply positive to pin 7 of the interface, and the supply 0 volt reference to the Host GND connection.

Both types

The main operating power and DALI communications are taken from the DALI connection. In the absence of a DALI supply connection the interface will not function.

Note: Interface’s nominal power consumption is 3mA from the RS232 port and 10mA from DALI.

2.2. 503AV Interface Power

The interface is powered entirely from the Digidim connection. The RS232 connection is RX, TX and GND. All connections are via terminals, with the Digidim connection using the standard Helvar 6-way terminal connector.

3. Interface Connection

This section describes the connection of the RS232 AV interface.

See *Figure 1: Connection Instructions* (overleaf) for details on how to connect the AV interface to the AV system.

3.1. Connection Details

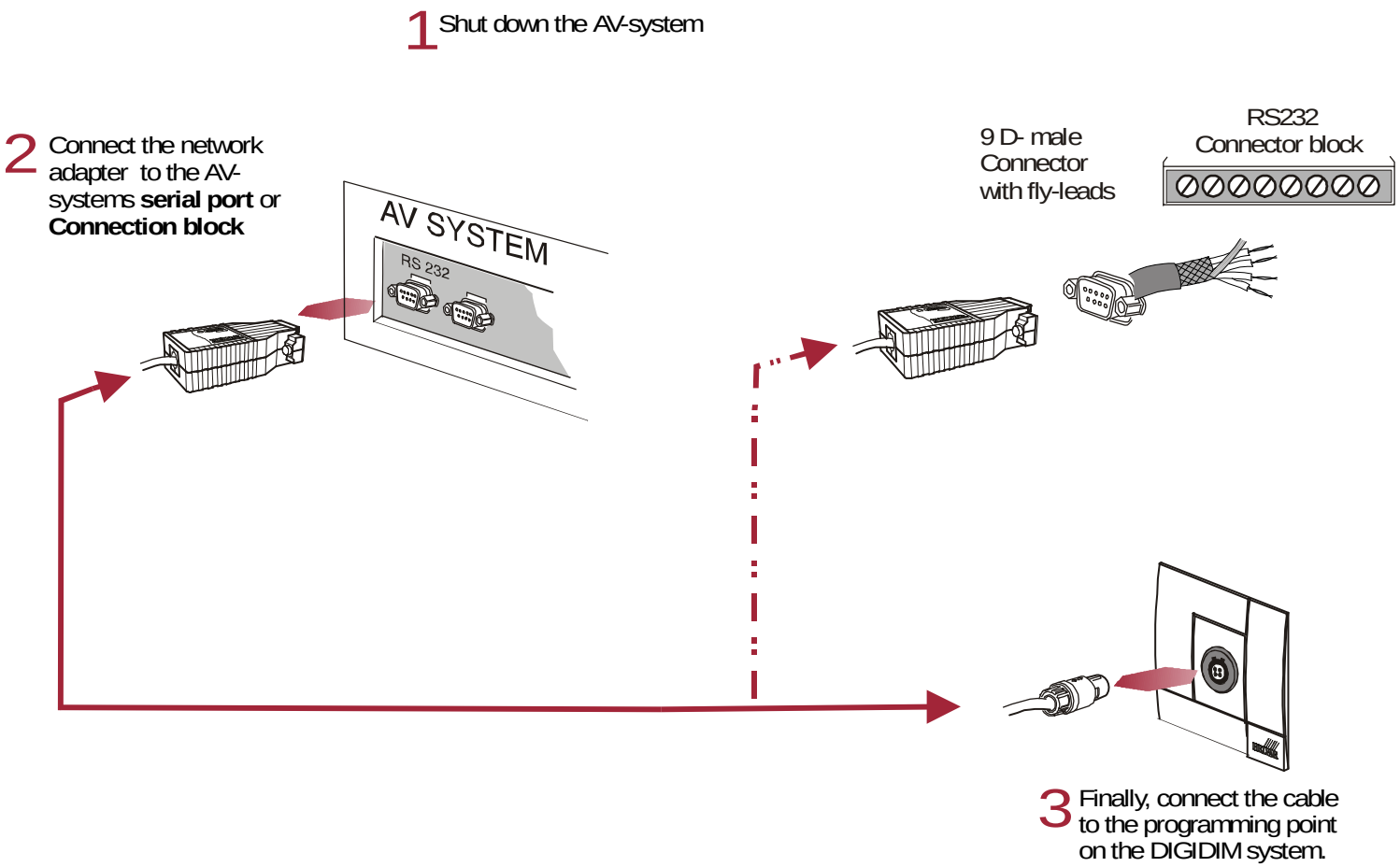

Figure 1: Connection Instructions

3.2. 505 Interface RS232 Connector

The 505 interface uses the industry standard 9-way D-type socket connector. All connections conform to the conventional pin designations. The interface uses the transmit (TX), receive (RX), request to send (RTS) and data terminal ready (DTR) connections. The new interface does not use the ground connection.

Note: All unspecified pins have no connection.

Old Interface (Black Case)

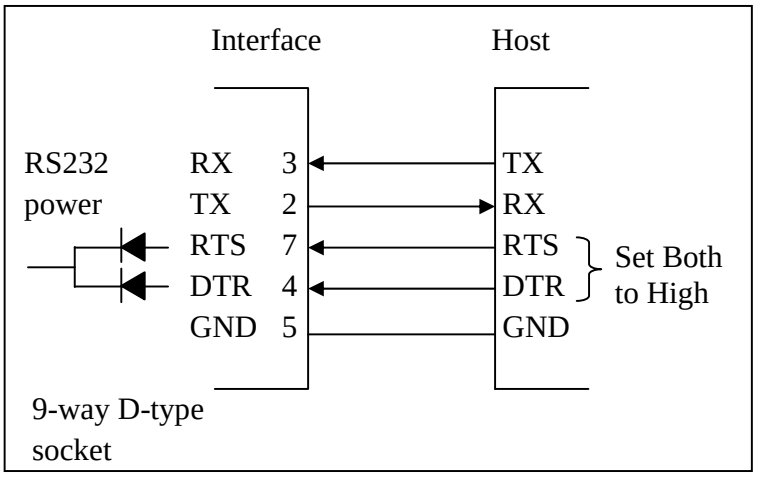

New Interface (Transparent Case)

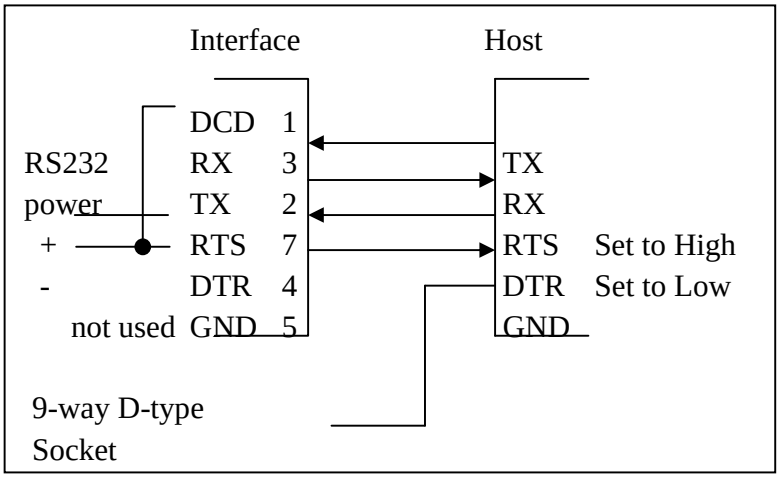

4. Operating Modes

4.1. 505 Operational Default

The interface can operate in several modes. From power up (of the DALI supply), the 505 interface's operational default is for Helvar DIGIDIM 'Toolbox' Software. The mode command is required to activate the interface for AV use. (*Note that the reply message to the mode command contains the interface firmware revision*).

4.2. 503AV Operational Default

The default for the 503AV interface is AV mode.

5. Installation

5.1. 505 Installation

If the DIGIDIM system that you want to configure does not include a 180 programming point, one must be installed before the RS232 connection can be used.

Important Notes:

- Before installation, isolate the circuit.
- All DIGIDIM cabling must be 230v mains-rated.
- For safety reasons, do not connect the interface other than with a correctly installed programming point (*see document '180 Programming Point (I438M1)', included on the CD within the 503 package*).
- Connect the adapter directly to the serial port (9-way D-type). *If you are not sure which connector is the serial port, refer to your system documentation*.

5.2. 503AV Installation

The DIN-rail mounted 503AV interface is intended for installation in a protected enclosure or area. Always follow safe practice when working in a protected area. Digidim and RS232 connections are made directly at the module. Mains-rated cable must be used for Digidim and preferably segregated from the RS232.

5.3. System Installation Example

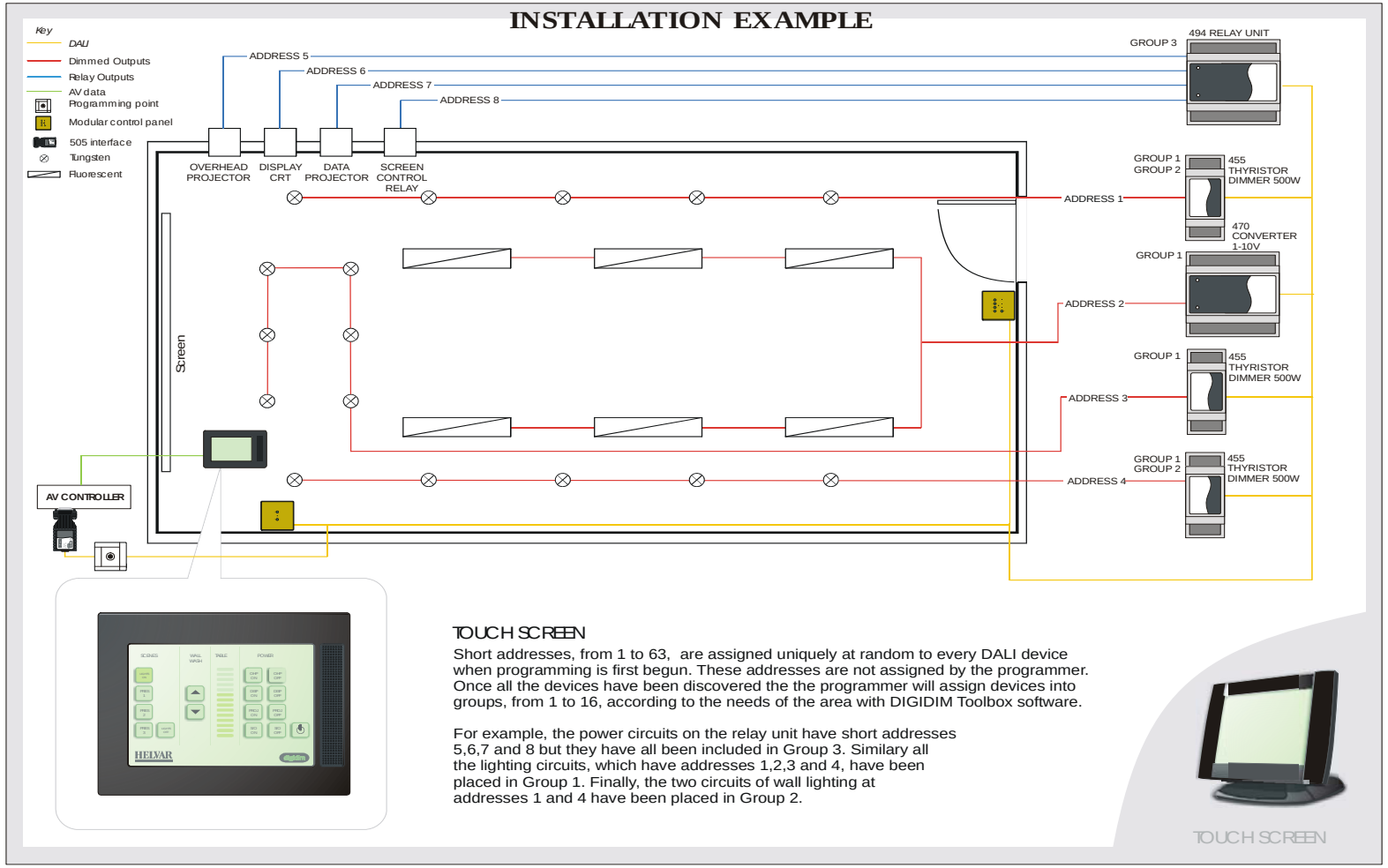

Figure 2: System Installation Example

6. Programming a DIGIDIM system

Before commands can be sent to the DIGIDIM system it has to be programmed. Programming usually covers assigning device addresses, allocation of groups and setting scene levels. This is done with DIGIDIM Toolbox Software or, in case of a small system, with the DIGIDIM IR remote controller 303.

Note: Ensure that you fully understand the operation of the 'Toolbox' Software before programming. For full instructions on the use of the application see the DIGIDIM Toolbox online help manual.

7. Messages

Refer to documents *'RS232 to DALI Command List'* (*7860077) and 'RS232 to 900 Lighting Router Command List'* (*D004102,)* for more information on messaging formats.

7.1. Message Handling

Synchronisation

Data transfer to the interface is auto-synchronising. An incomplete or damaged string of message bytes will be discarded after approximately 3 byte periods. Subsequent bytes will be considered a new message string.

Data Transfer

Messages are handled singularly. Passing a message to the interface will generate a reply, either as a message acknowledgement or the returned data to a query request. A subsequent message can not be passed to the interface until after the reply; an attempt to do so will result in its loss.

Each transmitted message will result in a single return message.

7.2. Message Structure

Transmission to Interface

This is the message to be transmitted to the DALI system or to configure the interface.

The normal message type is 3 bytes; 4 or 5 bytes for special types.

Length byte:	this defines the number of bytes to FOLLOW.
Message type:	refer to following description.
DALI data byte(s):	2 bytes to the DALI protocol: 1st byte is address and 2nd is command or data.

Return from Interface

This is the message from the DALI system, or acknowledgement from the interface.

The message can be 2, 3 or 4 bytes in size.

Length byte:	this defines the number of bytes to follow.
Message type:	defines reply status and if there is data to follow (*refer to table in section 8.3 Message List*).

Data byte(s):	message echo or returned data to DALI protocol.
Pack byte(s):	contents not defined; ignore.

DALI System Traffic

All messages present on the DALI system which are not generated by the interface, are automatically returned from the interface. This allows complete monitoring of all activity of the DALI system components. Other than the byte count, all messages are returned as seen by the interface.

DALI Component Addressing

A DALI system, or sub-net, can consist of up to 63 individual components, each with its own ‘short address’. These short addresses are assigned at the time of configuration and programming of the DALI system. In addition, any number of the individual components can be put into a group with consequential group control. There are a total of 16 groups in the DALI protocol and each component can belong to none, one or any number of the groups. To allow communication to all components at the same time, a ‘broadcast’ address is used.

This allows three methods of addressing: broadcast, group and individual short address (or a total of 1 + 16 + 63 addresses, which is 80).

Other than the interface control commands, all messages can have one of 80 address possibilities. Multiple addresses can only be sent by multiple messages; no combinations within a single message are permitted.

7.3. Message List

Note: Refer to document 7860077, 'RS232 to DALI Command List' for a full list of DALI commands.

Command	Transmit	Return
Set Interface AV mode – this command must be sent at power up.	03, 82, 02, 00	03, 82, xx, yy where the decimal value of xx.yy is the Interface revision
General form	No. of bytes to follow, type, DALI address, DALI command or data	No. of bytes to follow, reply type (see notes), returned data or message echo
Go to level 'dd'	03, 51, a0, dd where a0 = {bxxxxxxx0}DALI level address and dd = DALI level of 00 through FE	03, 64, a0, dd
OFF	03, 51, a1, 00 where a1 = {bxxxxxxx1}DALI command address	03, 64, a1, 00
UP	03, 51, a1, 01 where a1 = {bxxxxxxx1}DALI command address	03, 64, a1, 01
DOWN	03, 51, a1, 02 where a1 = {bxxxxxxx1}DALI command address	03, 64, a1, 02
STEP UP	03, 51, a1, 03 where a1 = {bxxxxxxx1}DALI command address	03, 64, a1, 03
STEP DOWN	03, 51, a1, 04 where a1 = {bxxxxxxx1}DALI command address	03, 64, a1, 04
Recall MAX level	03, 51, a1, 05 where a1 = {bxxxxxxx1}DALI command address	03, 64, a1, 05
Recall MIN level	03, 51, a1, 06 where a1 = {bxxxxxxx1}DALI command address	03, 64, a1, 06
STEP DOWN and OFF	03, 51, a1, 07 where a1 = {bxxxxxxx1}DALI command address	03, 64, a1, 07
ON and STEP UP	03, 51, a1, 08 where a1 = {bxxxxxxx1}DALI command address	03, 64, a1, 08

Command	Transmit	Return
Go to Scene ‘s’	03, 51, a1, 1s where a1 = {bxxxxxxx1}DALI command address and s = DALI Scene of 1 through 16 (Hex values 0 to F, for Scenes 1 to 16)	03, 64, a1, 1s
Query Lamp Interface Status – short Address ‘sc’ where sc = 1 to 63 (offset 1 and LSB set to 1) - example for address’1’	03, 55, sc, 90 where sc = {b0xxxxxx1} giving range of sc = 01 to 7D 03, 55, 01, 90	03, 66, sb, sb where sb = {bxxxxxxxx} status bit information, where: bit 0 status; ‘0’=OK bit 1 lamp failure; ‘0’=OK bit 2 lamp power; ‘0’=OFF bit 3 limit error; ‘0’=last requested level between MIN and MAX Level or OFF bit 4 fade; ‘0’=fade ready, ‘1’=fade running bit 5 Reset state; ‘0’=NO bit 6 missing short address; ‘0’=NO bit 7 Power failure;’0’=NO 02, 6B, 90 no lamp interface at that address
Query Actual Level – short Address ‘sc’ where sc = 1 to 63 (offset 1 and LSB set to 1) - & for ‘1’	03, 55, sc, A0 where sc = {b0xxxxxx1} giving range of sc = 01 to 7D 03, 55, 01, A0	03, 66, xx, xx where xx = 0 through FF 02, 6B, A0 no lamp interface at that address
DALI Addressing		
Broadcast address for go to level	03, 51, FE, dd where dd = DALI level	
Broadcast address for DALI command	03, 51, FF, cc where cc = DALI command	
Group addressing, 1 to 16 for DALI level Group ‘gl’, go to level dd; where gl = 1 to 16 (offset 1 with MSB set to 1, bits 6&5 set to 0 and LSB set to 0)	03, 51, gl, dd where gl = {b100xxxx0} giving range of gl = 80 to 9E	03, 64, gl, dd
Group addressing, 1 to 16 for DALI command Group ‘gc’, action command cc; where gc = 1 to 16 (offset 1 with MSB set to 1, bits 6&5 set to 0 and LSB set to 1)	03, 51, gc, cc where gc = {b100xxxx1} giving range of gc = 81 to 9F	03, 64, gc, cc
Short addressing, 1 to 63 for DALI level Address ‘sl’, go to level dd; where sl = 1 to 64 (offset 1 with MSB set to 0 and LSB set to 0)	03, 51, sl, dd where sl = {b0xxxxxx0} giving range of sl = 00 to 7C	03, 64, sl, dd
Short addressing, 1 to 63 for DALI command	03, 51, sc, cc where sc = {b0xxxxxx1}	03, 64, sc, cc

Command	Transmit	Return
Address 'sc', action command cc; where sc = 1 to 64 (offset 1 with MSB set to 0 and LSB set to 1)	giving range of sc = 01 to 7D	
Error return messages	For query commands All types	02, 6C, xx Multiple replies. This will be returned for example if a query is sent with the broadcast address. Here xx = pack byte, ignore. 03, 70, xx, xx Failure in transmitting a DALI message. Where xx = pack byte for all types. 03, 71, xx, xx Illegal DALI frame received, may or may not be as a result of requested transmission. 03, 73, xx, xx Unknown command (from computer) 03, 74, xx, xx Error. Already transmitting and can not accept further data 03, 75, xx, xx Fault. DALI line held low for too long – external problem.

8. Appendices

8.1. Return message format

Reply type

The ‘reply type’ is dependent upon the transmitted message type and source of transmission. The return for a self-generated AV type 51 will be 64, as shown. However, messages originating from other sources will differ. For example, those originating from a DIGIDIM push-button panel will typically show a type return of 61. These variations are for internal use by DIGIDIM components and are of no consequence to AV control. If return messages are to be processed, it is recommended that the exact content of the reply type byte is ignored.

Data formats

Some third party AV interface equipment display received data in different formats to hexadecimal, and may even display received bytes in different formats, dependent upon the data value. In such cases, the displayed data may appear to be a mixture of hexadecimal and other formats, such as ASCII. This is entirely a function of the third party equipment and the user should ascertain the details from the third party vendor.

As an example:

Transmit 03 51 01 10 *Return* 03 64 01 10 *Displayed Return* 03 d 01 10 (d = ASCII for hex 64)

In general, data bytes only within the range of 20h to 7Fh will be converted to the ASCII character. The standard conversion will be as per the table below, but confirmation should be gained from the third party vendor.

HEX	-0	-1	-2	-3	-4	-5	-6	-7	-8	-9	-A	-B	-C	-D	-E	-F
2-	SP	!	‘	#	$	%	&	’	(	)	*	+	,	-	.	/
3-	0	1	2	3	4	5	6	7	8	9	:	;	<	=	>	?
4-	@	A	B	C	D	E	F	G	H	I	J	K	L	M	N	O
5-	P	Q	R	S	T	U	V	W	X	Y	Z	[	\	]	^	_
6-	‘	a	b	c	d	e	f	g	h	i	j	k	l	m	n	o
7-	p	q	r	s	t	u	v	w	x	y	z	{	|	}	~	del

Note: For more detailed listing of commands, refer to document ‘RS232 to DALI Command List’ (7860077).

8.2. Touch Screen Commands

The touch screen panel has been given the controls shown. The commands associated with these are shown below.

	Destination of action	Interface instruction	Group Address	Command Data
LIGHTS ON	Select Scene 1 in Group 1	03 51	100 0000 1 = 81 hex	0001 0000 = 10 hex
PRES 1	Select Scene 2 in Group 1	03 51	100 0000 1 = 81 hex	0001 0001 = 11 hex
PRES 2	Select Scene 3 in Group 1	03 51	100 0000 1 = 81 hex	0001 0010 = 12 hex
PRES 3	Select Scene 4 in Group 1	03 51	100 0000 1 = 81 hex	0001 0011 = 13 hex
LIGHTS OFF	Select OFF in Group 1	03 51	100 0000 1 = 81 hex	0000 0000 = 00 hex

	Destination of action	Interface instruction	Group Address	Command Data
▲	Group 2 lights UP	03 51	100 0001 1 = 83 hex	0000 0001 = 01 hex
▼	Group 2 lights DOWN	03 51	100 0001 1 = 83 hex	0000 0010 = 02 hex

	Destination of action	Interface instruction	Short Address	Command Data
	Bargraph to adjust address 4 to a direct level	03 51	0 000011 0 = 06 hex	LLLL LLLL =00 to FE hex

Example code is in attached files

	Destination of action	Interface instruction	Short Address	Command Data
OHP ON	Turn address 5 ON (Recall MAX level)	03 51	0 000100 1 = 09 hex	0000 0101 = 05 hex
OHP OFF	Turn address 5 OFF	03 51	0 000100 1 = 09 hex	0000 0000 = 00 hex
DISP ON	Turn address 6 ON (Recall MAX level)	03 51	0 000101 1 = 0B hex	0000 0101 = 05 hex
DISP OFF	Turn address 6 OFF	03 51	0 000101 1 = 0B hex	0000 0101 = 00 hex
PROJ ON	Turn address 7 ON (Recall MAX level)	03 51	0 000110 1 = 0D hex	**0000 0101 = 05 hex**
PROJ OFF	Turn address 7 OFF	03 51	0 000110 1 = 0D hex	0000 0000 = 00 hex
SCR ON	Turn addresss 8 ON (Recall MAX level)	03 51	0 000111 1 = 0F hex	0000 0101 = 05 hex
SCR OFF	Turn address 8 OFF	03 51	0 000111 1 = 0F hex	0000 0101 = 00 hex

	Destination of action	Interface instruction	Broadcast Address	Command Data
⏻	Turn everything OFF	03 51	1111111 1 = FF hex	0000 0000 = 00 hex

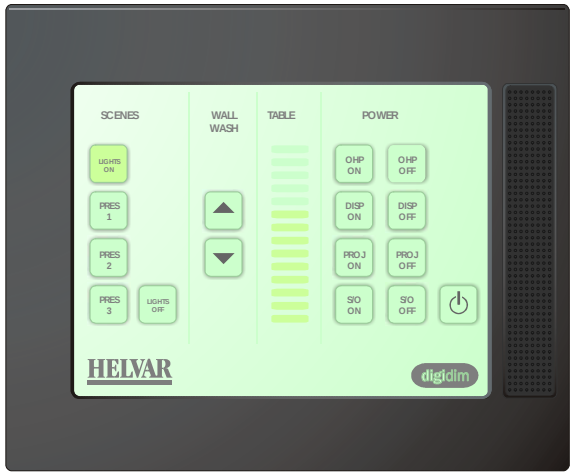

TOUCH SCREEN

Full list of common DALI messages are contained in document:
"RS232 to DALI command list 7860077.pdf"
Example files for AMX and Crestron based on the solution above
are available from the 503 CD; File's AMX DALI demo and Crestron DALI demo.

TOUCH SCREEN

Figure 3: Touch Screen Controls